Fig. 54: Power Windows Circuit

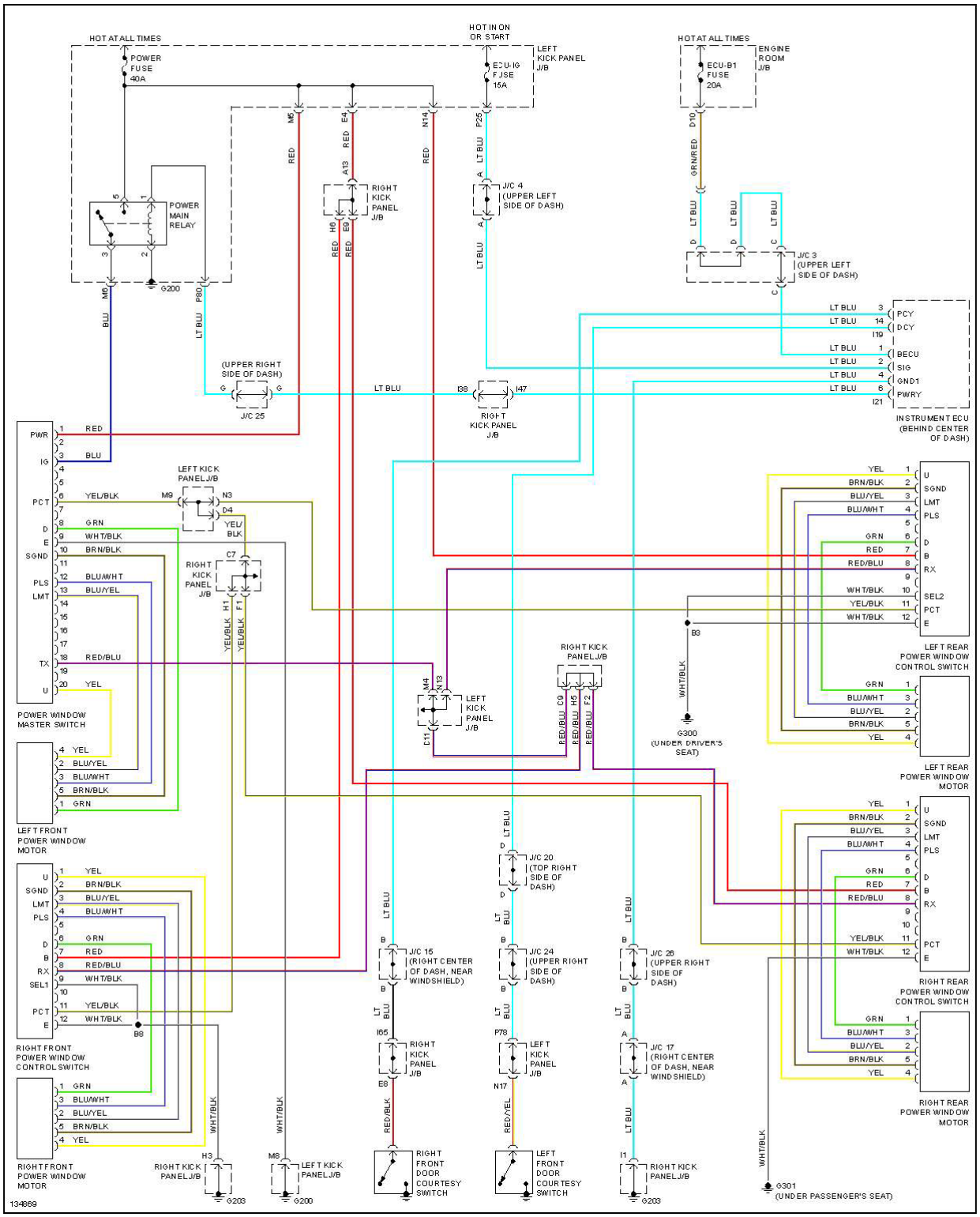

© 2011 Mitchell Repair Information Company, LLC.