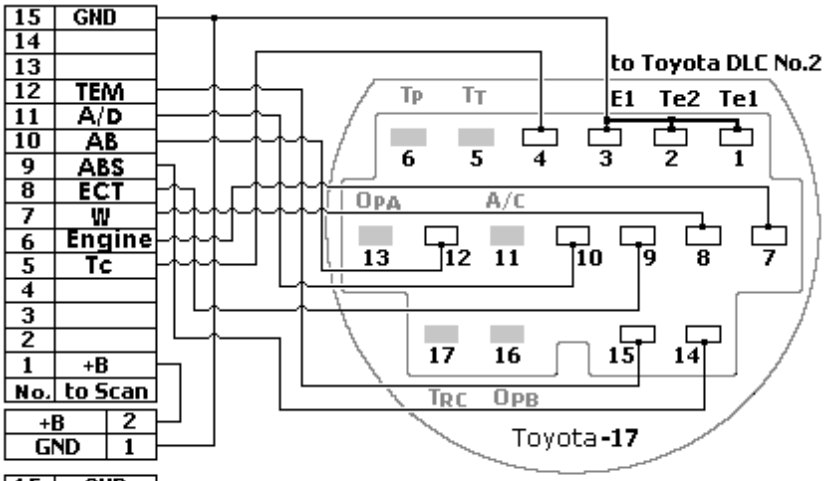

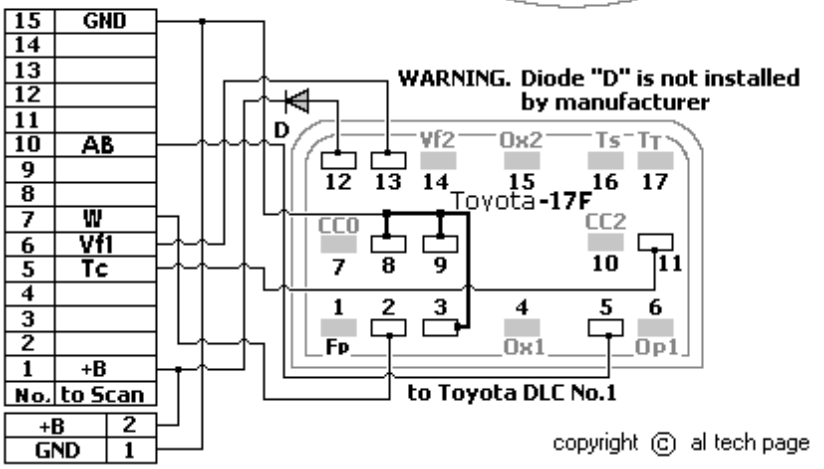

copyright © al tech page